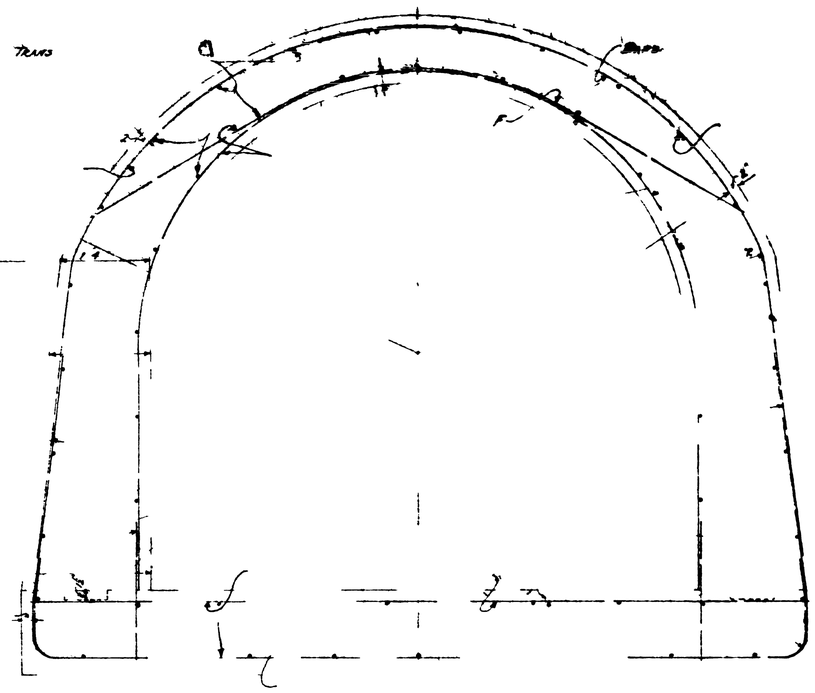

SECTION SHOWN UNDER STEEL

DIMENSIONS

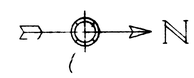

101. Bolt	42
209 Bolt	32
S nd	2
Reinf	

REVISIONS

NO.	DATE	DESCRIPTION

IFIC E F

MOUNTAIN VIEW VENUE HIGHL

DRAWN BY B. STONE

CHECKED BY

COMPUTATIONS BOOK NO. PAGE NO.

W. O. No.

GENERAL P.

SA

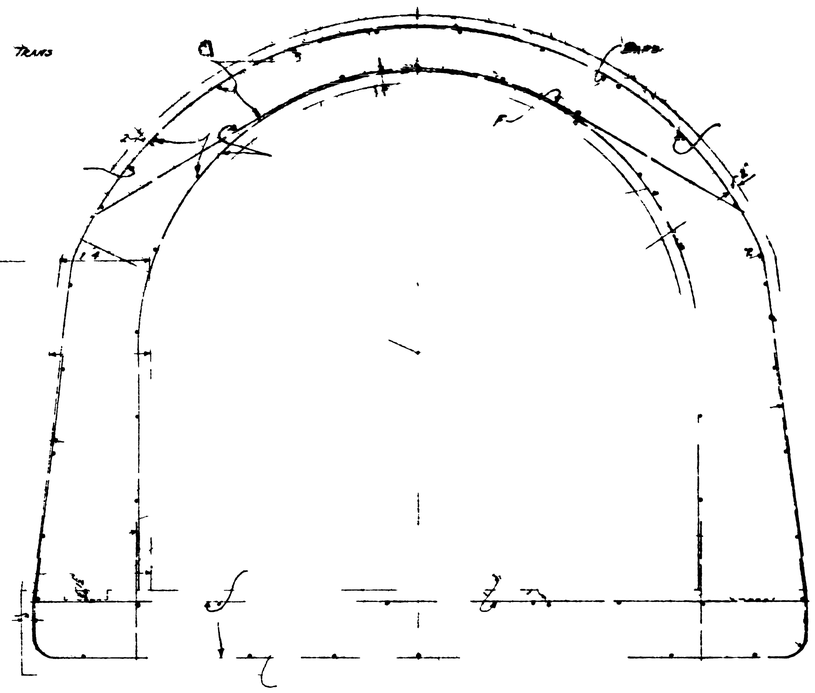

SECTION SHOWN UNDER STEEL

DIMENSIONS

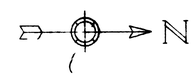

101. Bolt	42
209 Bolt	32
S nd	2
Reinf	

REVISIONS

NO.	DATE	DESCRIPTION

IFIC E F

MOUNTAIN VIEW VENUE HIGHL

DRAWN BY B. STONE

CHECKED BY

COMPUTATIONS BOOK NO. PAGE NO.

W. O. No.

GENERAL P.

SA